
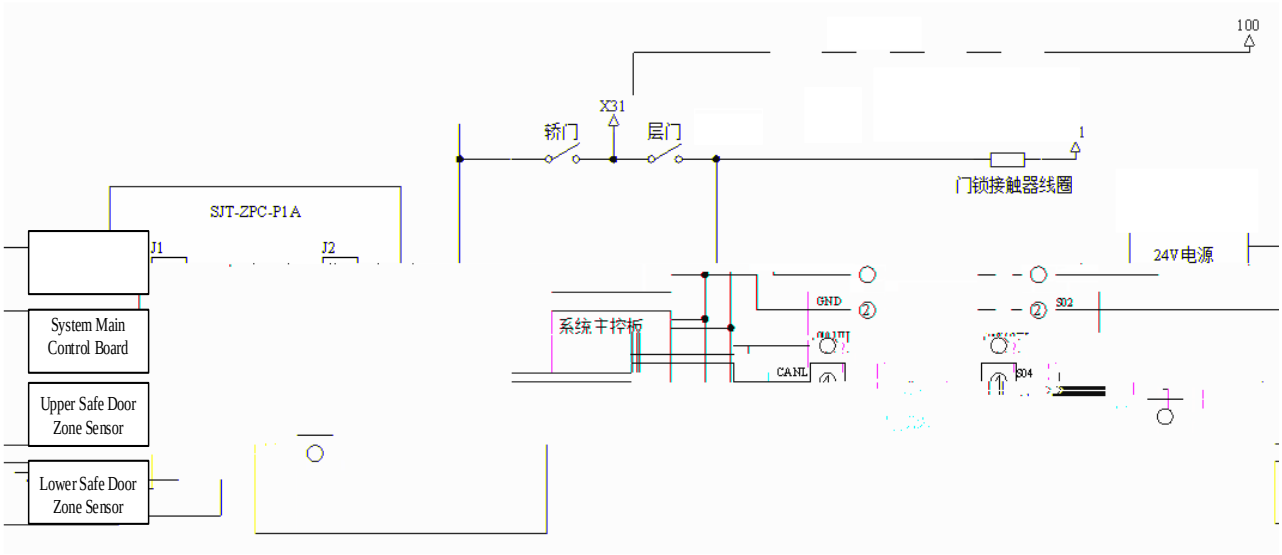
100
X31
轿门
层门
1
门锁接触器线圈
SJT-ZPC-P1A
J1
J2
24V电源
GND
②
系统主控板
CANL
S02
S04
System Main Control Board
Upper Safe Door Zone Sensor
Lower Safe Door Zone Sensor

¶

¶

¶

¶

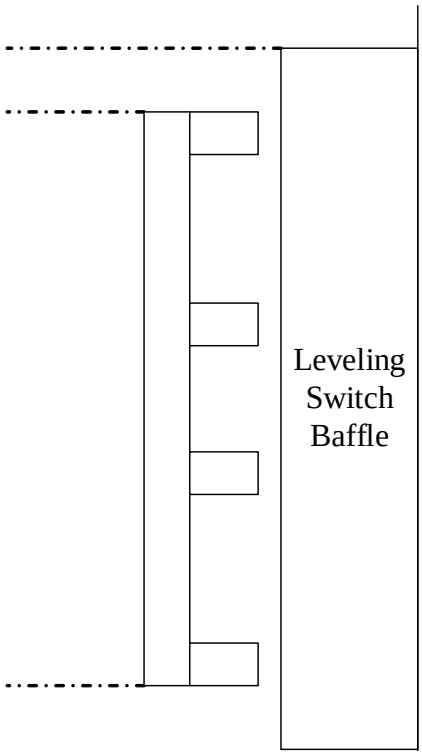
Leveling
Switch
Baffle

